REVISIONS					
ZONE	REV.	DESCRIPTION	DATE	APPROVED	ECN NO.
	A	ORGINAL RELEASE	5/10/2018	SS	

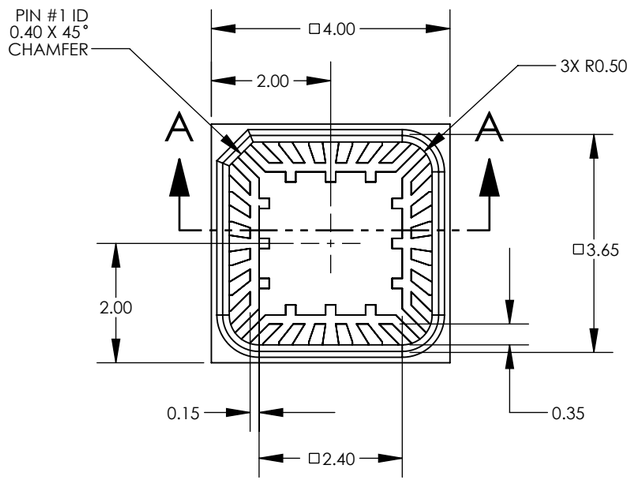

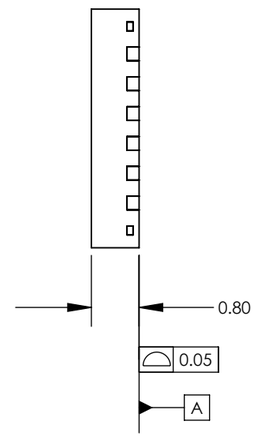

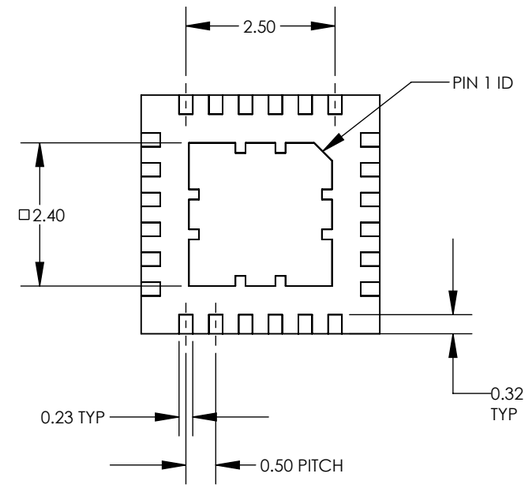

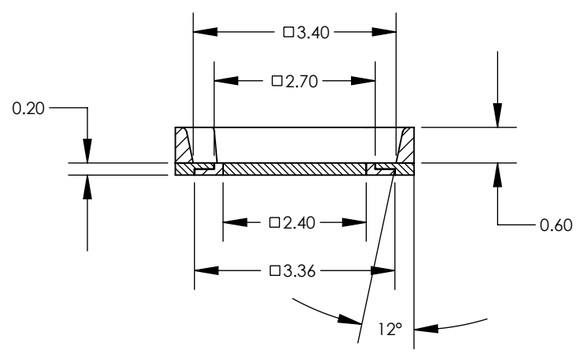

SECTION A-A
SCALE 10 : 1

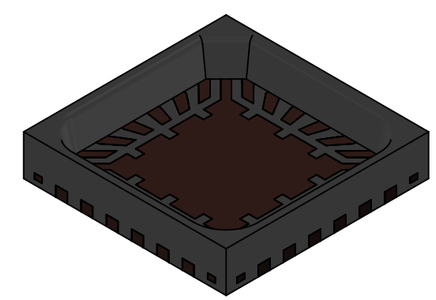

NOTES

1. MATERIALS:
   LEAD FRAME: COPPER 194FH, THK = 0.203±0.008
   BODY: SEMICONDUCTOR MOLDING EPOXY, CONTACT QUIK-PAK FOR DETAILS.

2. FINISH:
   LEAD FRAME: Ni/Pd/Au

   ELECTROLESS NICKEL: 3 - 5 MICRONS (118 -197 micro-inches)
   ELECTROLESS PALLADIUM: .15 - .51 MICRON (6 - 20 micro-inches)
   GOLD PLATE: 0.30 - 0.50 MICRON (12 - 20 micro-inches)

   BODY SURFACE FINISH: VDI 21-24 (1.12-1.6 Ra)

3. PACKAGE MISMATCH: BODY OFFSET FOR LEAD FRAME = 0.076mm MAX.

4. UNLESS OTHERWISE SPECIFIED, RADIUS ON ALL MOLDED EDGES AND CORNERS = 0.25mm MAX.

5. PACKAGE CONFORMS TO JEDEC MO-220

PROPRIETARY AND CONFIDENTIAL

THE INFORMATION CONTAINED IN THIS DRAWING IS THE SOLE PROPERTY OF QUIK-PAK, A DIV. OF DELPHON IND. ANY REPRODUCTION, IN PART, OR AS A WHOLE WITHOUT THE WRITTEN PERMISSION OF QUIK-PAK IS PROHIBITED.

NEXT ASSY	USED ON
APPLICATION	

UNLESS OTHERWISE SPECIFIED:
DIMENSIONS ARE IN MILLIMETERS
TOLERANCES ARE:
ANGULAR: ±0.5 degree
.X = ±0.76 .XX: ±0.25
.XXX = ±0.13 .XXXX = ±0.01

MATERIAL: SEE NOTE 1
FINISH: SEE NOTE 2
DO NOT SCALE DRAWING

	NAME	DATE
DRAWN	S.Swen	5/10/18
CHECKED	S. Swen	5/10/18
ENG APPR.	S. Swen	5/10/18

COMMENTS:

QUIK-PAK
10987 VIA FRONTERA
SAN DIEGO, CA 92127
858-674-4676

OPEN·molded Plastic Package

TITLE:
QP-QFN24-4MM-0.50MM
WITH LOCKS

SIZE	DWG. NO.	REV
B	501103	A
SCALE: 12:1	WEIGHT:	SHEET 1 OF 1