REVISIONS				
ZONE	REV.	DESCRIPTION	DATE	APPROVED
	A	ORIGINAL RELEASE	4/5/2013	SS

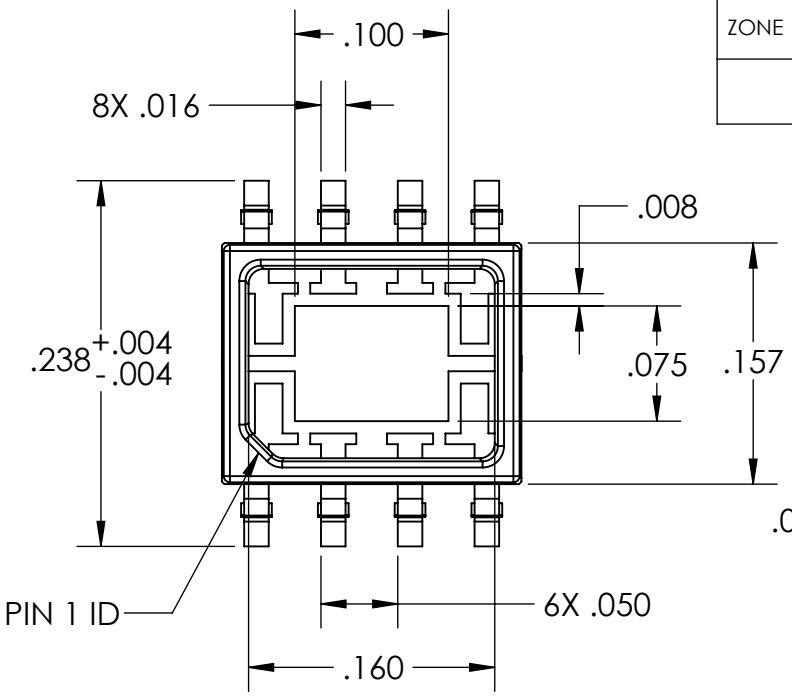

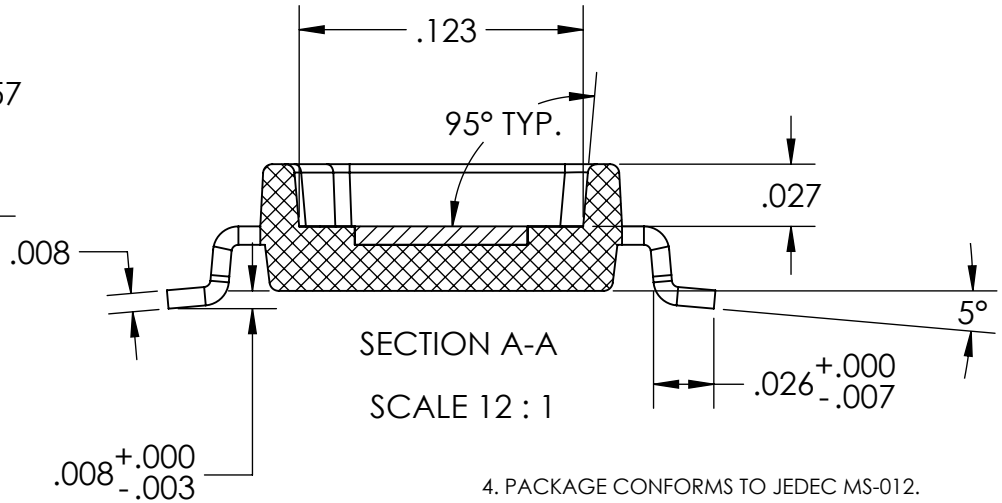

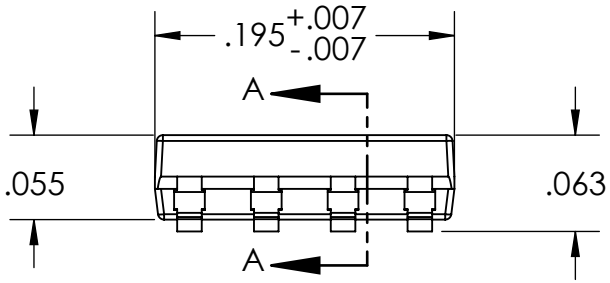

4. PACKAGE CONFORMS TO JEDEC MS-012.

3. UNLESS OTHERWISE SPECIFIED, RADIUS ON ALL MOLDED SURFACES AND CORNERS .002.

2. FINISH: LEAD FRAME ELECTROLESS NICKEL PER MIL-C-26075, CLASS 1, 100 TO 300 MICROINCHES (2.5um - 7.6um) THICK.
GOLD PLATE PER MIL-G-45204, TYPE 3, GRADE A, CLASS 1.
BODY SURFACE FINISH: VDI 21 - 24 (1.12 - 1.6 Ra)

1. MATERIALS: LEAD FRAME, COPPER ALLOY 194 FULL HARD.
BODY: SHIN-ETSU KMC-2520L-M1.

GENERAL NOTES: (UNLESS OTHERWISE SPECIFIED)

		UNLESS OTHERWISE SPECIFIED:		NAME	DATE
		DIMENSIONS ARE IN INCHES TOLERANCES ARE: FRACTIONAL: ±1/16" ANGULAR: ±0.5 degree .X = ±.030 .XX = ±.010 .XXX = ±.005 .XXXX = .0005	DRAWN	S. Swen	4/3/13
			CHECKED	S. Swen	4/5/13
			ENG APPR.	S. Swen	4/5/13
		MATERIAL SEE NOTE 1.	COMMENTS:		
NEXT ASSY	USED ON	FINISH SEE NOTE 2.			
APPLICATION		DO NOT SCALE DRAWING			

QPTECHNOLOGIES
A DIVISION OF PROMEX INDUSTRIES | QPTECHNOLOGIES.COM

TITLE:

PACKAGE OUTLINE DRAWING, SOIC, 8 LD, .150 WIDE

SIZE	DWG. NO.	REV
A	500562	A

SCALE: 10:1 | WEIGHT: | SHEET 1 OF 1

PROPRIETARY AND CONFIDENTIAL
THE INFORMATION CONTAINED IN THIS DRAWING IS THE SOLE PROPERTY OF QPTECHNOLOGIES. ANY REPRODUCTION IN PART OR AS A WHOLE WITHOUT THE WRITTEN PERMISSION OF QPTECHNOLOGIES IS PROHIBITED.

5 4 3 2 1